VESSELS

DECANTORS

Decantation is a process of separation of two immiscible liquids having different densities. When these liquids allowed to settle forms two distinct layers, heavier at bottom and lighter at top. Goel has developed a Decantor which is suitable for continuous decantation.

The mixture of liquids is continuously fed in the Decantor at low velocity. This allow sufficient residence time for the formation of separate layers. The light phase liquid is continuously removed from the light phase outlet at the top. The heavy phase liquid enters the dip pipe at lower end and overflow in the discharge pipe and is removed from the bottom.

Goel's Decantor provides continuous separation, visual monitoring, and ensure separation even after feed is stopped.

Decantors can be provided with Adjustable overflow valve, (Type B) to adjust the position of interface for different operating situations.

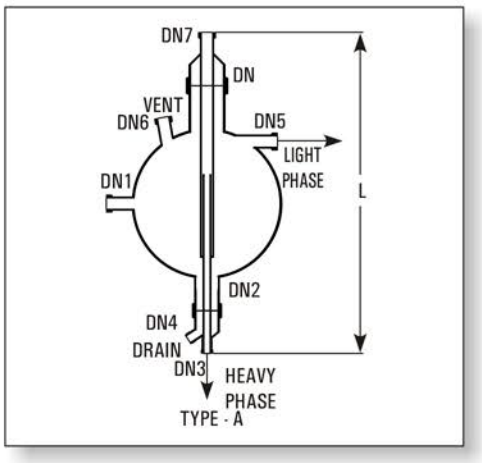

Cat. Ref.	Nominal Capacity	L	DN	Inlet DN1	DN2	Heavy Phase Outlet DN3	Drain DN4	Light Phase Outlet DN5	Vent DN6	DN7	Type
SPS20	20 L	800	80	25	50	25	25	25	25	50	A
SPS50	50 L	1025	100	40	50	25	25	40	40	50	A
SPS100	100 L	1175	150	40	50	25	25	40	40	50	A
SPS200	200 L	1475	225	40	50	25	25	40	40	50	A
SPA20	20 L	1000	80	25	50	25	25	25	25	50	B
SPA50	50 L	1225	100	40	50	25	25	40	40	80	B
SPA100	100 L	1375	150	40	50	25	25	40	40	80	B
SPA200	200 L	1675	225	40	50	25	25	40	40	80	B

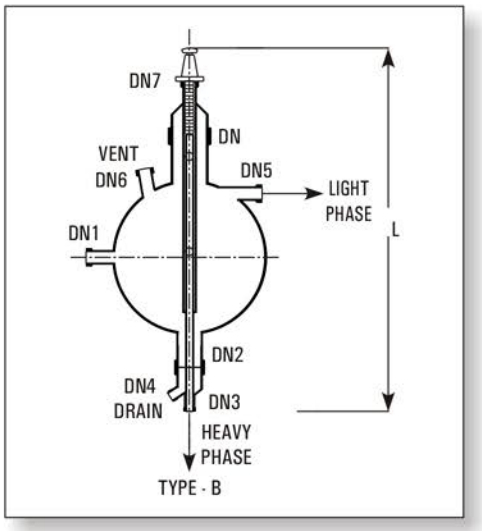
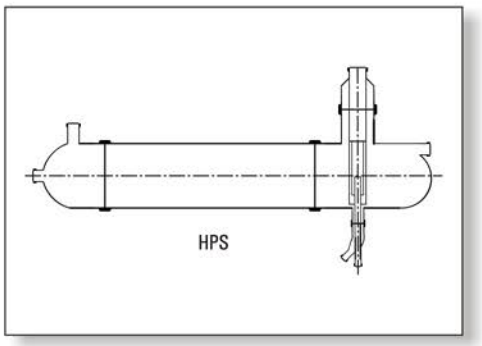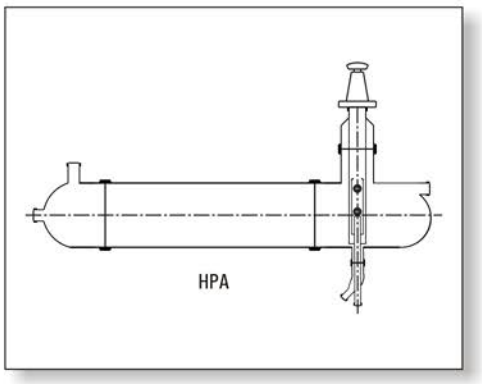
Decantors can also be constructed with horizontal cylindrical vessels (Cat.ref. HPS or HPA) to provide larger separating surface.